SPACE FACULTY

Satellite Design & Integration

DAY 2

2NDSpace

Satellite Kit Overview

Open your satellite boxes!

Let's place all the components and little bags on the tables to check everything we are going to need is there:

- Satellite subsystems (electronic boards).
- Hardware parts (screws, bolts, wires...).

If something is missing let me know!

Screwdriver Set

The screwdriver set includes a variety of bits to accommodate the diverse types of screws used in different devices and applications.

Various screws exist due to the need for specialized fastening solutions in manufacturing and design. Using the right bit for the corresponding screw head is crucial to prevent damage to screws or the bits themselves.

SPACE FACULTY
2NDSpace

Screwdriver Set

We have for instance:

- Hex screws, common in furniture and electronics.
- Phillips-head screws offering efficient torque transmission in many applications.
- Torx screws that provide enhanced security and durability.

SPACE FACULTY
2NDSpace

EPS Testing!

By looking at the EPS schematics, use the continuity function of the multimeter to check ground connections around the board.

- Find and show me at least 5 ground (GND) connections using the multimeter.
- <u>Be careful not to short circuit anything with the tips of multimeter probes!</u>

2NDSpace

Building the Ground Station (GS)

4xM3x6

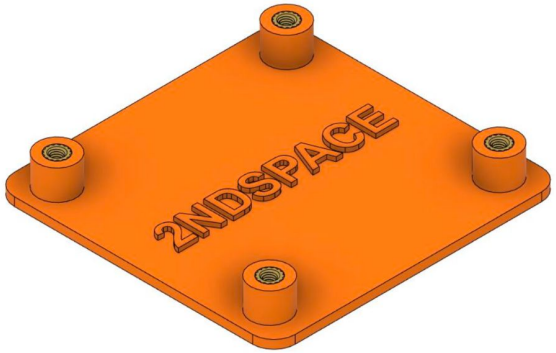

1x Ground Station Support

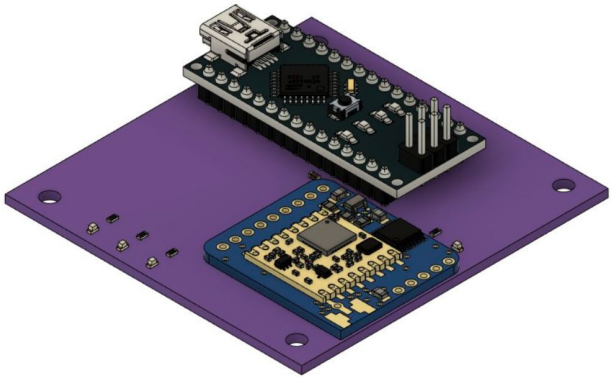

1x Ground Station Board

SPACE FACULTY
2NDSpace

Building the Ground Station (GS)

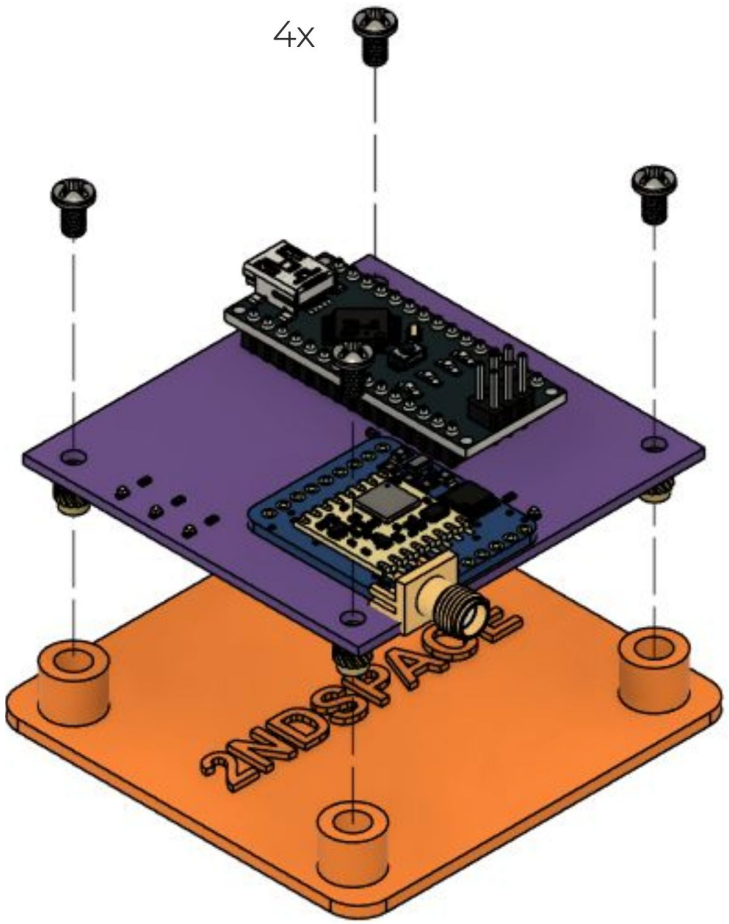

2NDSpace

Building the Ground Station (GS)

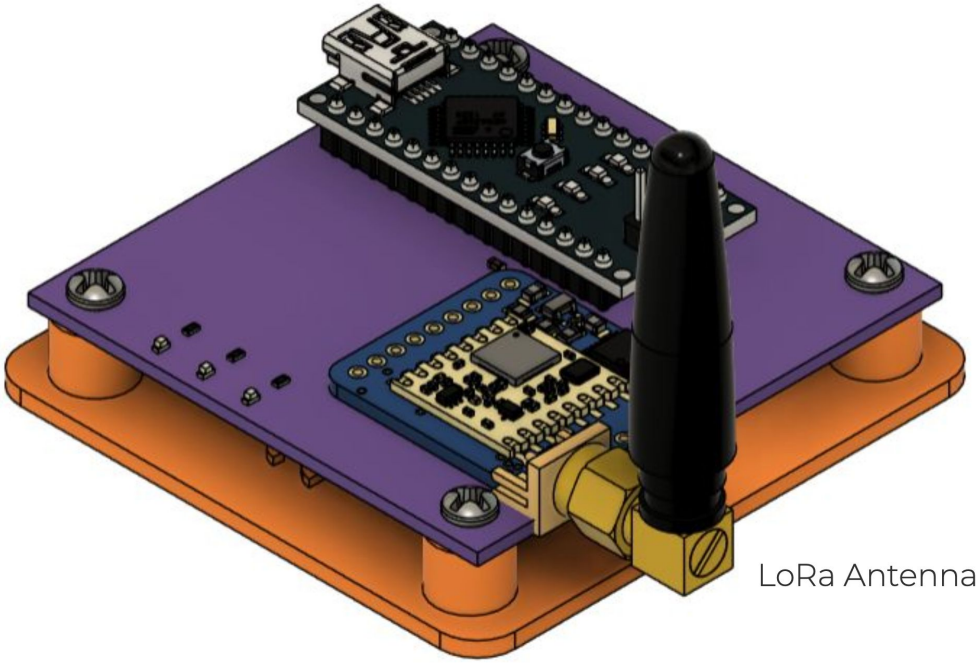

2NDSpace

Building the Ground Station (GS)

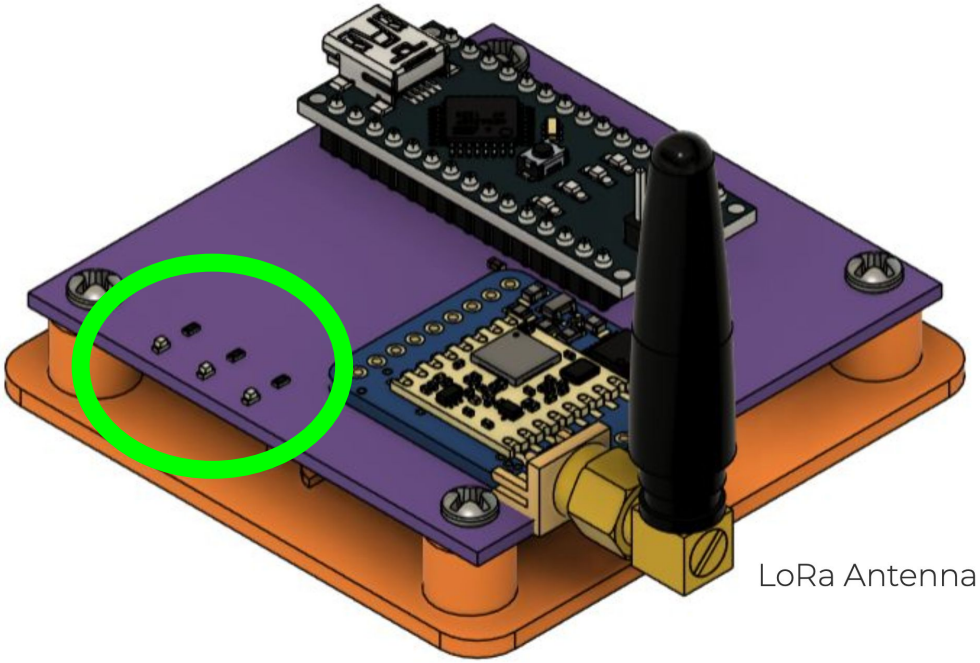

2NDSpace

Building the Ground Station (GS)

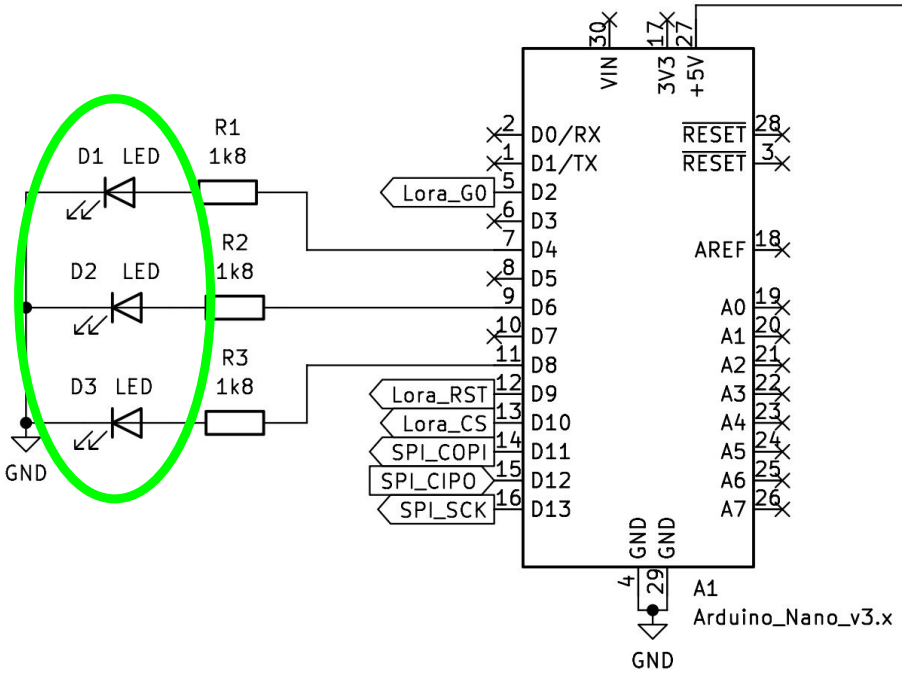

2NDSpace

Building the Ground Station (GS)

In the GS we have SMD LEDs.

SMD components are smaller, mounted directly on the PCB surface, and suitable for automated production.
PTH components are larger, have leads through holes, and are often manually soldered.

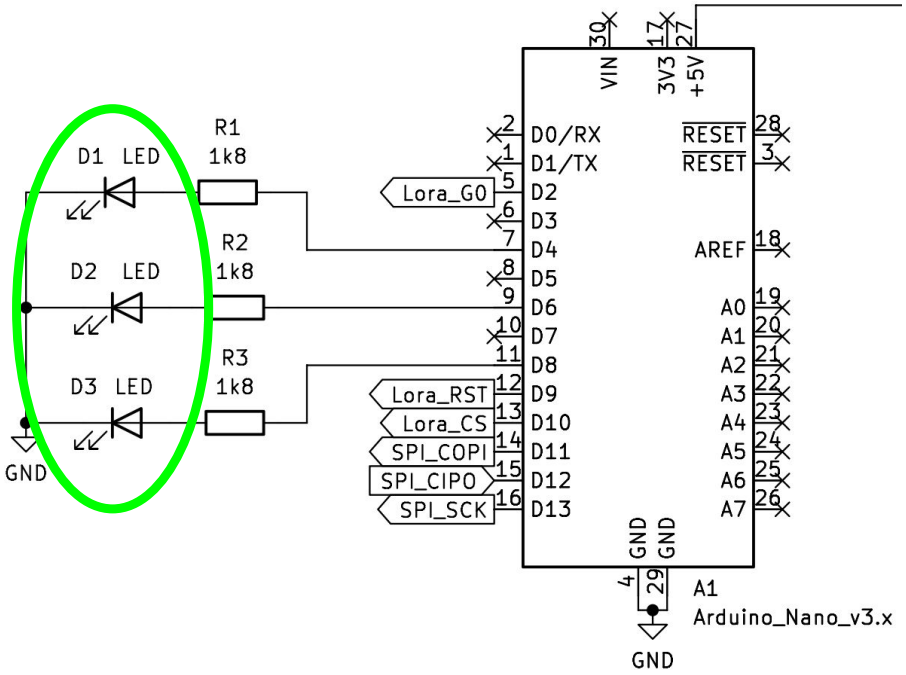

2NDSpace

Soldering Process

Soldering headers onto an Arduino board is a common practice when you need to attach pins for interfacing with other electronic components.

Let’s see how it’s done!

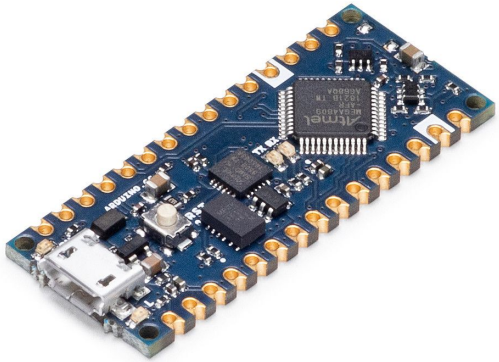

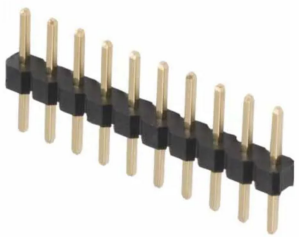

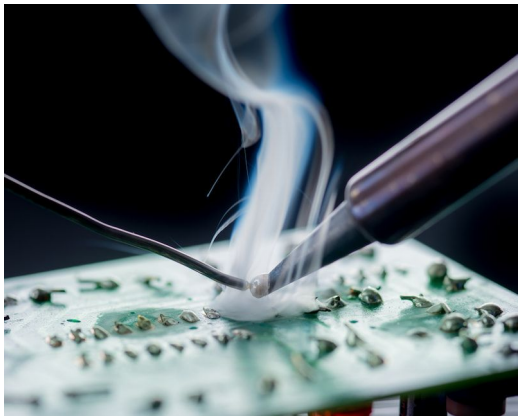

2NDSpace

Your First Code

What do you think this code does?

```
#define LED 4

void setup() {
  pinMode(LED, OUTPUT);
}

void loop() {
  digitalWrite(LED, HIGH);
}
```

2NDSpace

Your First Code

Open a new sketch in Arduino IDE and copy this code there, let's upload it together!

```
#define LED 4

void setup() {
  pinMode(LED, OUTPUT);
}

void loop() {
  digitalWrite(LED, HIGH);
}
```

2NDSpace

Let’s Start The Coding!

During this workshop, we will cover all the relevant aspects of Arduino programming, using the satellite as an example of a complete platform with inputs, outputs, both digital and analog, sensors, communication modules, and more.

Utilize all available online resources to help you figure out how to complete the exercises, similar to how engineers approach unfamiliar components by consulting documentation.

Please refrain from using ChatGPT or other AI systems, as they may provide solutions that can be misinterpreted, potentially leading to errors or a lack of understanding of how microcontroller programming works.

SPACE FACULTY
2NDSpace

How to Read Arduino Pinouts

Let's consider the ADCS's Arduino:

- When writing the code, you need to read the pinout from here (internal side of the box)
- EXAMPLE

```
#define SUN_SENSOR_1 A0
```

```
#define ENABLE_GPS 4
```

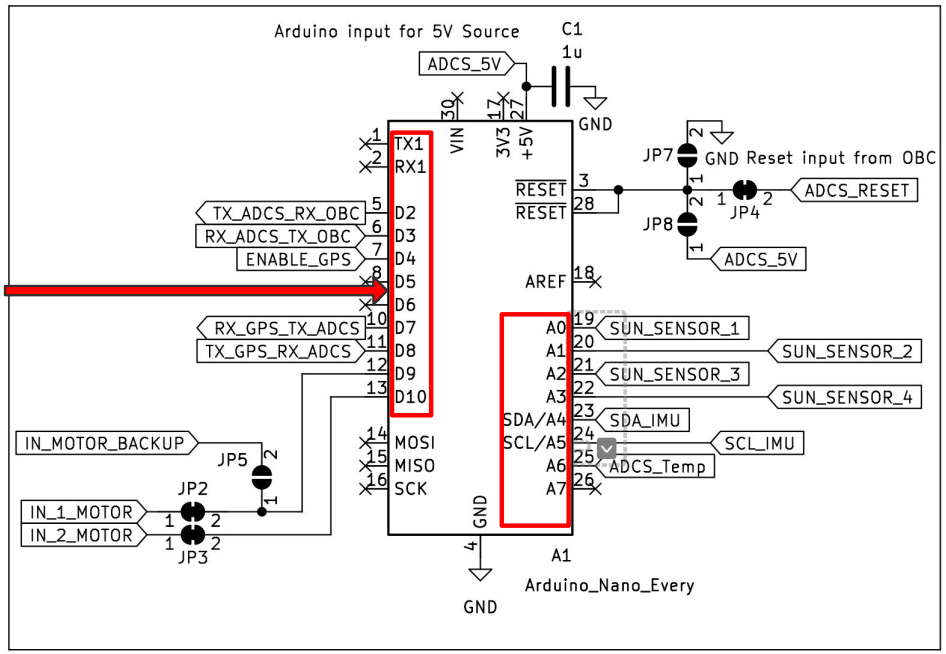

2NDSpace

Ground Station Exercises - LEDs

By looking at the GS schematics:

- Identify where LED D1 is connected to the Arduino.
- Write a code to turn it on.

SPACE FACULTY
2NDSpace

Ground Station Exercises - LEDs

By looking at the GS schematics:

- Identify where LED D1 is connected to the Arduino.
- Write a code to turn it on.
- Turn on LED D2 and D3 as well.

SPACE FACULTY
2NDSpace

Ground Station Exercises - LEDs

By looking at the GS schematics:

- Identify where LED D1 is connected to the Arduino.
- Write a code to turn it on.
- Turn on LED D2 and D3 as well.
- While keeping D2 and D3 on, write a code to blink the LED D1 (on and off) for 500ms. Use the **delay()** function for that.

SPACE FACULTY
2NDSpace

Ground Station Exercises - LEDs

By looking at the GS schematics:

- Identify where LED D1 is connected to the Arduino.
- Write a code to turn it on.
- Turn on LED D2 and D3 as well.
- While keeping D2 and D3 on, write a code to blink the LED D1 (on and off) for 500ms. Use the **delay()** function for that.
- Write a function to make LEDs blink all together. Hint:

```
void loop() {
  blink(500); //call the function here
}

void blink(int duration) {
  //write the code here
}
```

2NDSpace

Ground Station Exercises - LEDs

By looking at the GS schematics:

- Identify where LED D1 is connected to the Arduino.
- Write a code to turn it on.
- Turn on LED D2 and D3 as well.
- While keeping D2 and D3 on, write a code to blink the LED D1 (on and off) for 500ms. Use the **delay()** function for that.
- Write a function to make LEDs blink all together.
- Blink D1, D2 and D3 sequentially with a second delay between each other and print in serial monitor which LED is ON in that moment. Use **Serial.print()** for that.

SPACE FACULTY
2NDSpace

Ground Station Exercises - LEDs

- ...
- Blink D1, D2 and D3 sequentially with a second delay between each other and print in serial monitor which LED is ON in that moment. Use **Serial.print()** for that, you can find all the instructions on arduino website as per how to use this function.

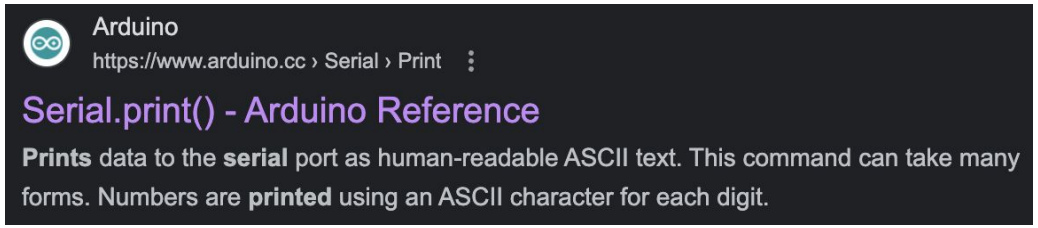

SPACE FACULTY
2NDSpace

Ground Station Exercises - LEDs

- ...
- Blink D1, D2 and D3 sequentially with a second delay between each other and print in serial monitor which LED is ON in that moment. Use **Serial.print()** for that, you can find all the instructions on arduino website as per how to use this function.
- Make an LED blink 5 times (1 second delay) using a **for loop** and then keep it off for 5 seconds.

SPACE FACULTY
2NDSpace

Ground Station Exercises - LEDs

- ...
- Blink D1, D2 and D3 sequentially with a second delay between each other and print in serial monitor which LED is ON in that moment. Use **Serial.print()** for that, you can find all the instructions on arduino website as per how to use this function.
- Make an LED blink 5 times (1 second delay) using a **for loop** and then keep it off for 5 seconds.
- Now make it blink 5 times as before, but it remains off afterwards.

SPACE FACULTY
2NDSpace

Ground Station Exercises - LEDs

- ...
- Blink D1, D2 and D3 sequentially with a second delay between each other and print in serial monitor which LED is ON in that moment. Use **Serial.print()** for that, you can find all the instructions on arduino website as per how to use this function.
- Make an LED blink 5 times (1 second delay) using a **for loop** and then keep it off for 5 seconds.
- Now make it blink 5 times as before, but it remains off afterwards. Hint: use a **while loop** before the **for loop**.

SPACE FACULTY
2NDSpace

Ground Station Exercises - LEDs

- ...
- Blink D1, D2 and D3 sequentially with a second delay between each other and print in serial monitor which LED is ON in that moment. Use **Serial.print()** for that, you can find all the instructions on arduino website as per how to use this function.
- Make an LED blink 5 times (1 second delay) using a **for loop** and then keep it off for 5 seconds.
- Now make it blink 5 times as before, but it remains off afterwards. Hint: use a **while loop** before the **for loop**.
- Write a code to turn on one LED if the serial monitor is available (send whatever letter to see if it works). If nothing is sent, the LED should stay off.

SPACE FACULTY
2NDSpace

Ground Station Exercises - LEDs

- ...
- Write a code to turn on one LED with a CHARACTER (**char**) via serial.

SPACE FACULTY
2NDSpace

Ground Station Exercises - LEDs

- ...
- Write a code to turn on one LED with a CHARACTER (**char**) via serial. E.g. if I send “A” the LED turns on.
- Write a code to turn on one LED with a STRING (**String**) via serial. E.g. if I send “LED1” the LED turns on.

SPACE FACULTY
2NDSpace

Ground Station Exercises - LEDs

- ...
- Write a code to turn on one LED with a CHARACTER (**char**) via serial. E.g. if I send “A” the LED turns on.
- Write a code to turn on one LED with a STRING (**String**) via serial. E.g. if I send “LED1” the LED turns on.
- Find a way to turn on each LED (D1, D2, D3) by sending “D1”, “D2” or “D3”. If not called, the LEDs should be off.

SPACE FACULTY
2NDSpace

Satellite Design & Integration

END of DAY 2

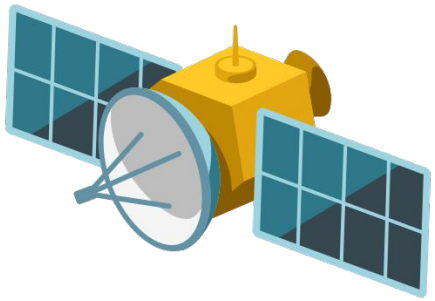

2NDSpace